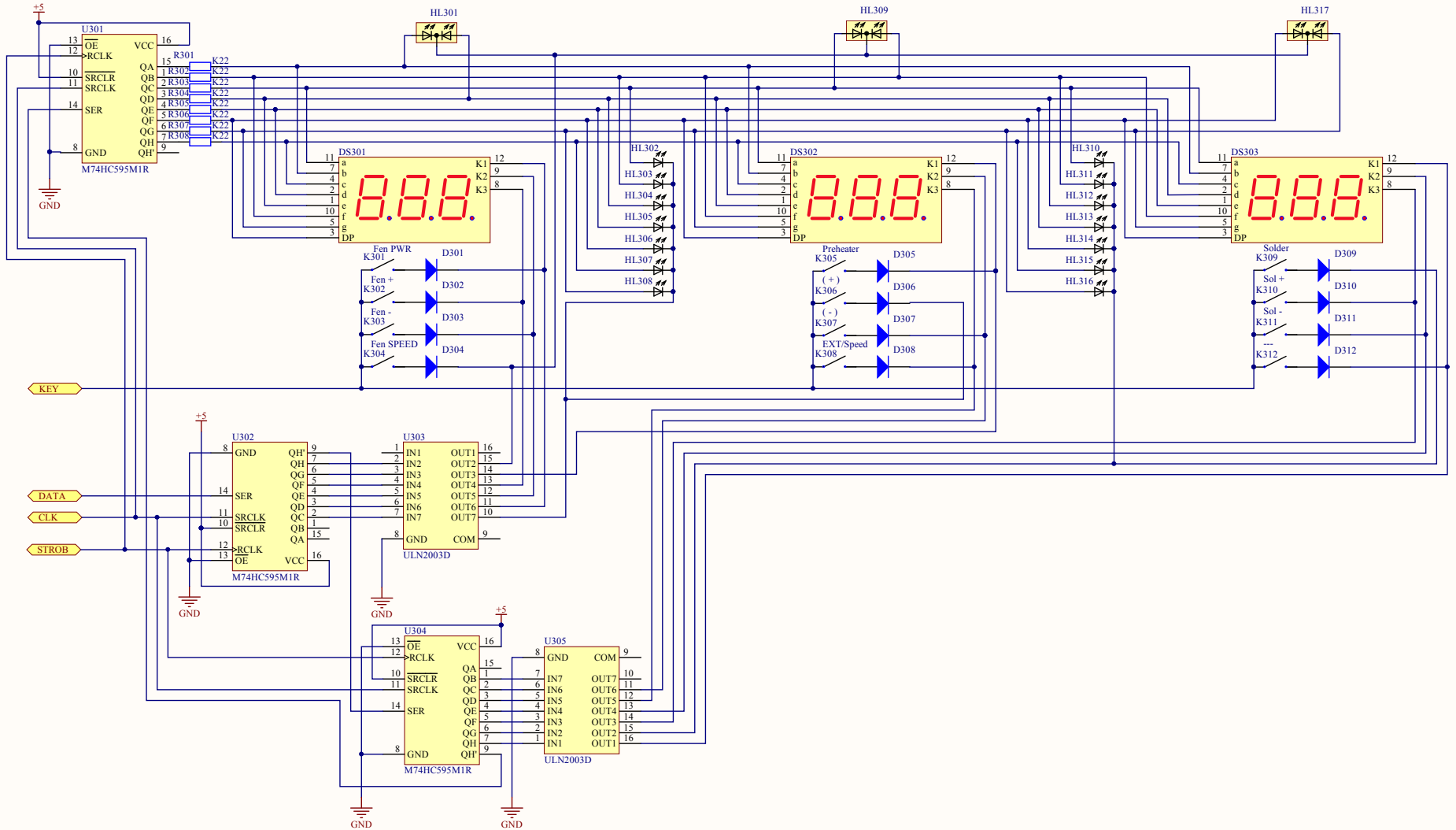

Title		
Size A3	Number	Revision
Date: 15.05.2013		Sheet of
File: C:\AD\Display.SchDoc		Drawn By: